Electrolux PROFESSIONAL

Modular Cooking Range Line thermaline 85 - Sink unit on closed base, 1 Side with Backsplash

ITEM # _____

MODEL # _____

NAME # _____

SIS # _____

AIA # _____

588635 (MBZAGBD3OO)	Sink Unit on Closed Base, one-side operated with backsplash

Short Form Specification

Item No. _____

Sink unit on closed base, with a large stainless steel tap, constructed according to DIN 18860_2 with 20 mm drop nose top and 70 mm recessed plinth. Internal frame for heavy duty sturdiness in stainless steel. 2 mm top in 1.4301 (AISI 304). Flat surface construction, easily cleanable. THERMODUL connection system enables seamless worktop when units are connected and avoids soil penetrating.
IPX5 water resistant certification.
Configuration: Freestanding, one side operated with backsplash.

APPROVAL: _____

Main Features

- All major components may be easily accessed from the front.
- THERMODUL connection system creates a seamless work top when units are connected to each other thus avoiding soil penetrating vital components and facilitating the removal of units in case of replacement or service.
- Large stainless steel tap.

Construction

- Fitted on a closed base.
- 2 mm top in 1.4301 (AISI 304).
- IPX5 water resistance certification.
- Unit constructed according to DIN 18860_2 with 20 mm drop nose top and 70 mm recessed plinth.
- Flat surface construction with minimal hidden areas to easily clean all surfaces
- Internal frame for heavy duty sturdiness in stainless steel.

Optional Accessories

• Connecting rail kit for appliances with backsplash, 850mm	PNC 912498	❑
• Portioning shelf, 400mm width	PNC 912522	❑
• Portioning shelf, 400mm width	PNC 912552	❑
• Folding shelf, 300x850mm	PNC 912579	❑
• Folding shelf, 400x850mm	PNC 912580	❑
• Fixed side shelf, 200x850mm	PNC 912586	❑
• Fixed side shelf, 300x850mm	PNC 912587	❑
• Fixed side shelf, 400x850mm	PNC 912588	❑
• Stainless steel front kicking strip, 400mm width	PNC 912630	❑
• Stainless steel side kicking strip left and right, wall mounted, 850mm width	PNC 912659	❑
• Stainless steel side kicking strip left and right, back-to-back, 1700mm width	PNC 912662	❑
• Stainless steel plinth, against wall, 400mm width	PNC 912878	❑
• Stainless steel side panel, 850x700mm, right side, against wall	PNC 913003	❑
• Stainless steel side panel, 850x700mm, left side, against wall	PNC 913004	❑
• Back panel, 400x700mm, for units with backsplash	PNC 913009	❑
• Endrail kit, flush-fitting, with backsplash, left	PNC 913115	❑
• Endrail kit, flush-fitting, with backsplash, right	PNC 913116	❑
• Endrail kit (12.5mm) for thermaline 85 units with backsplash, left	PNC 913206	❑

• Endrail kit (12.5mm) for thermaline 85 units with backsplash, right	PNC 913207	❑
• U-clamping rail for back-to-back installations with backsplash	PNC 913226	❑
• Insert profile, d=850mm	PNC 913231	❑
• Side reinforced panel only in combination with side shelf, for against the wall installations, right	PNC 913261	❑
• Side reinforced panel only in combination with side shelf, for against the wall installations, left	PNC 913262	❑
• Stainless steel dividing panel, 850x700mm, (it should only be used between Electrolux Professional thermaline Modular 85 and thermaline C85)	PNC 913670	❑
• Stainless steel side panel, 850x700mm, flush-fitting (it should only be used against the wall, against a niche and in between Electrolux Professional thermaline and ProThermetic appliances and external appliances - provided that these have at least the same dimensions)	PNC 913686	❑

The company reserves the right to make modifications to the products without prior notice. All information correct at time of printing.

Modular Cooking Range Line thermaline 85 - Sink unit on closed base, 1 Side with Backsplash

Front

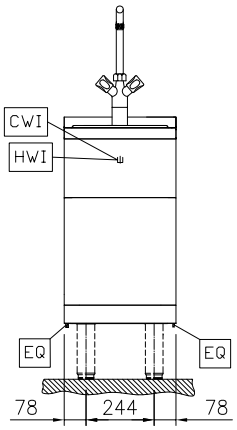

Side

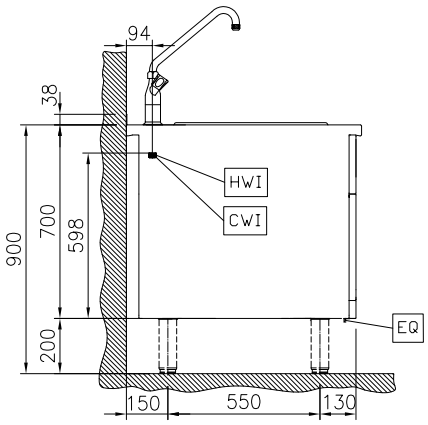

CWI1 = Cold Water inlet 1 (cleaning)
D = Drain
HWI = Hot water inlet

Top

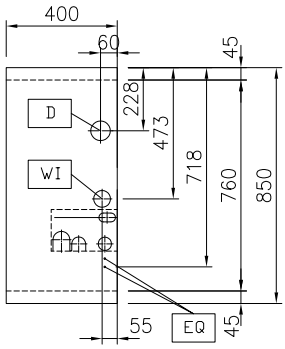

Water:

Inlet water line size:	
588635 (MBZAGBD300)	3/4"
Drain line size:	1"
Incoming Cold/hot Water line size:	3/4"

Key Information:

External dimensions, Width:	400 mm
External dimensions, Depth:	850 mm
External dimensions, Height:	700 mm
Net weight:	33 kg

The company reserves the right to make modifications to the products without prior notice. All information correct at time of printing.

2024.10.06